WIXON BATHWORKS

60″ x 36″ FRONT SKIRTED TUB

WIX36L-01 | WIX36R-01

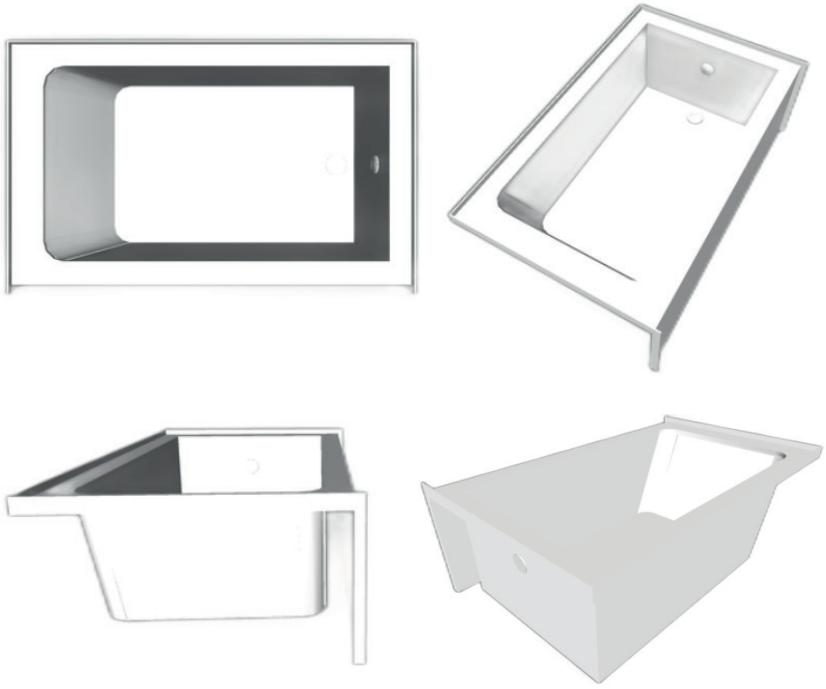

COLOR: WHITE

FEATURES

Right and Left Hand Drain
Wide Decking
Lumbar Support
Nonskid Base

MATERIALS

Durable Acrylic
Shiny Smooth Surface
Fiber-Reinforced
Polymer Backing

CODES / STANDARDS

ASTM E162
ICC A117.1
ADA
CSA B45.5/IAPMO Z124
On-Site Support
National Distribution

MADE IN THE USA

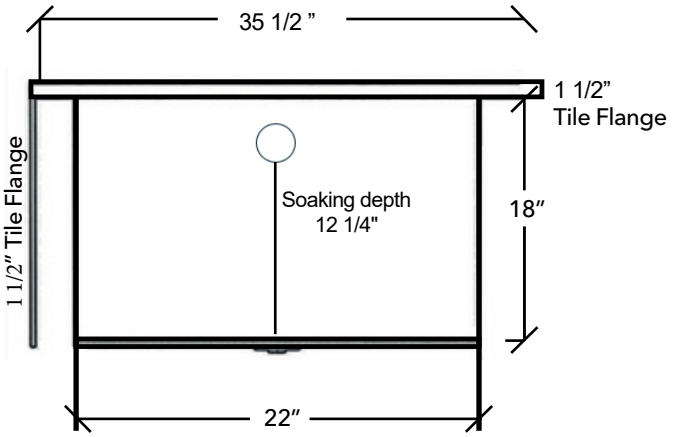

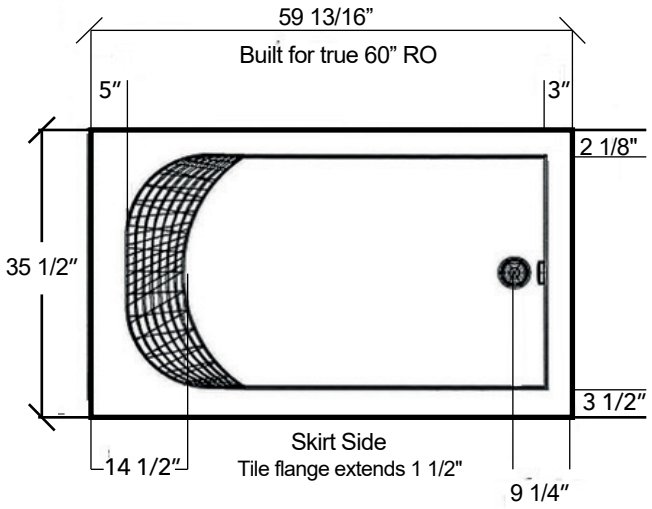

872 Boatcallie Road | Bryan, TX 77808
(979) 383-2252
orders@wixonbathworks.org